Overview

BECSys7 equipment-room controls provide continuous monitoring and control of sanitizers, oxidizers, pH, conductivity, turbidity, polymer feed, enzyme feed, system flow rates, system pressures and vacuum, chemical inventory levels, and surge tank (Autofill) and backwash holding tank levels. The BECSys7 can optionally provide automatic filter backwash for up to 16 filters.

Patented VFD control technology and Total Dynamic Head monitoring assures optimal and efficient circulation pump operation, while simultaneously assuring optimal water quality. Indoor facilities will benefit from the BECSys7's ability to monitor combined chlorine levels and control UV intensity levels.

There are numerous ways to stay connected including *BECSys Now!* App for iPhone/IPad and Android smartphones/tablets, Email and Text Message Alarm Notifications, BECSys for Windows software, as well as optional MODBUS, BACnet, Metasys N2 and LonWorks BMS interfaces. The EZConnect™ system offers simple and secure remote access as an alternative to traditional IT-intensive remote access techniques; however EZConnect can be easily disabled in cases where traditional techniques are preferred. EZMail adds email notification delivery without the need for local email server configuration.

Advanced safety features and multi-level security are standard, and every BECSys7 comes complete with pH, ORP, temperature sensors, flow switch, machined flow cell, and factory-trained start-up and support provided by local distribution.

Connectivity & Data Logging

Email and Text Message Alarm Notifications are supported by the integral Gbit Ethernet connection, and integration with Wi-Fi networks is supported with the optional BECSys Wi-Fi module. All inputs and system events are recorded in on-board data logs, accessible with *BECSys for Windows* PC software, which is included with every BECSys7. The *BECSys Now!* App provides convenient 24/7 access to BECSys7 status.

Remote Access and Alarm Notification

- ✓ Gbit Ethernet with EZConnect and EZMail
- ✓ Email and Text message alarm notifications
- ✓ BECSys for Windows Windows™ 10 compatible PC software package included
- ✓ *BECSys Now!* App for IOS iPhone/iPad and Android smartphones/tablets
- ✓ Wi-Fi compatibility with optional BECSys Wi-Fi module
- ✓ Optional MODBUS, BACnet, Metasys N2, or LonWorks interface, operates concurrently with BECSys for Windows

Data-Logging

- ✓ Data logs stored in NAND flash memory, which does not require a battery to preserve data logs during power outages
- ✓ One full year (365 days) of input readings history, with 1 minute resolution
- ✓ One full year (365 days) of system events (e.g. alarms, parameter changes, user logins and operational cycles)
- ✓ Download logs to USB flash drive for upload into BECSys for Windows

Warranty

- ✓ 5 years electronics
- ✓ 2 years pH, ORP and temperature sensors
- ✓ 1 year optional sensors and flow cell

Regulatory Approvals/Certifications

- ✓ NSF: NSF Certified and Listed to NSF/ANSI Standard 50
- ✓ USA: ETL Listed ANSI/UL 61010-1
- ✓ Canada: ETL Listed CAN/CSA C22.2 #61010-1
- ✓ Europe/CE: CENELEC EN 61010-1
  - European Community Low Voltage Directive 73/23/EEC
- ✓ Electromagnetic compatibility
  - FCC part 15 sub part B
  - EN 61326
  - European Community EMC Directive 89/336/EEC

User Interface

- ✓ 14 line x 40 character backlit LCD, with front-panel contrast adjustment and automatic temperature compensation
- ✓ Single-touch access to Set Points, Relay Modes, Calibrations, Backwash status/settings, Menu access, and Reset Fail/Safes.

System Security

- ✓ Three levels of security access codes – Operator (6), Manager (2), and Rep (1).
- ✓ Data logs record history of access identified by user.

Control Outputs

- ✓ **Solid-State Relays:** Four (4) standard solid-state relay outputs
- ✓ **Mechanical Relays:** Five (5) standard mechanical relay outputs; One 8A and Four 3A
- ✓ **Additional Relays:** Fifteen (15) additional solid-state relay or mechanical outputs with addition of up to 3 optional BECSys SRX or MRX relay expansion modules
- ✓ **4-20mA Outputs:** Eight (8) optional separately isolated 4-20mA analog outputs, each of which can be configured to
  - o record any enabled input
  - o control recirculation pump VFD
  - o control main drain modulating valve

Safety Features

- ✓ **Manual-On Limit**: built-in limits automatically return manual overrides to automatic control, to prevent accidentally leaving relays activated following service/troubleshooting efforts.
- ✓ **High/Low Alarm Settings & Control Lockouts:** Programmable high and low alarm settings for all inputs, and programmable lockout of sanitizer feed upon pH high or low alarm.
- ✓ **No Flow Alarm & Flow Restored Delay:** Assures sensors are monitoring an actively circulating water stream, with programmable control lockout following no-flow conditions.
- ✓ **Feed Limit Alarms:** Programmable fail-safes to prevent overfeeds due to equipment or systems failures.
- ✓ **Emergency Off:** Front-panel Emergency Off button immediately halts all chemical feeds and control outputs; can be password protected.
- ✓ **Internal Safety Shield:** Prevents access to high voltage circuitry or wiring during fuse replacement.

Controller Dimensions

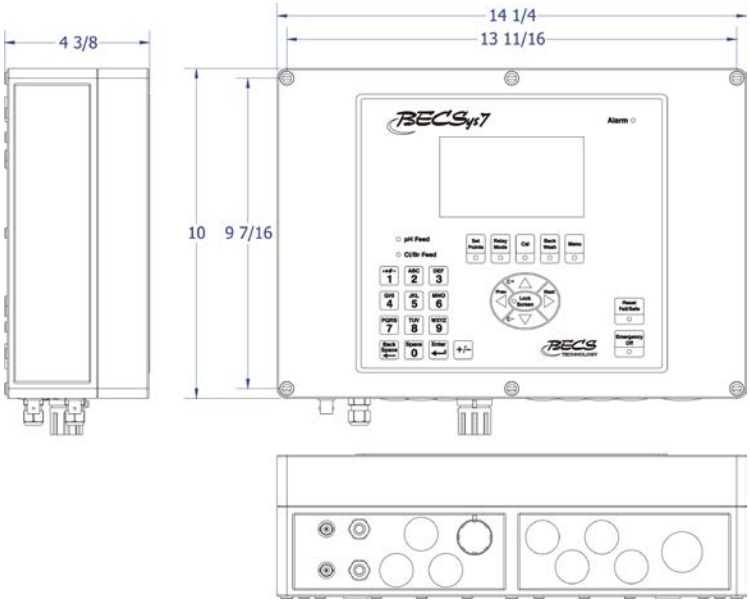

Standard Control Features

Standard Sensors

- ✓ **pH**: Configurable for feed-up, feed-down, or dual feed, and either ON/OFF or Time-Based Proportional feed.
- ✓ **ORP** (Platinum tip standard; gold tip optional):
  - o **Primary Sanitizer**: Based on ORP input, free chlorine input (if installed), or bracketed combination of the two (if free chlorine sensor is also installed)
  - o **Sanitizer Booster**: Selectable trigger setpoint and separate ending set point.
  - o **Ozone**: Feed-up based upon ORP and/or ppm set points (if ppm sensor is installed), with Fireman Cycle feature and Energy Conservation mode.
- ✓ **Temperature**
  - o **Heater**: On/off control of heater with Fireman Cycle feature, Energy Conservation mode and minimum flow rate set point (inhibits heater if flow rate drops below set point).

Water Chemistry Control Functions

- ✓ All system inputs (standard and optional) feature high/low alarm settings
- ✓ **Superchlorination**: Manually-triggered feed-up superchlorination set point, based upon ORP or ppm.
- ✓ **Dechlorination**: Feed-down control of dechlorination agent.
- ✓ **LSI & RSI**: Langelier Saturation Index and Ryzner Saturation Index, computed based upon current inputs and Ca Hardness and Alkalinity entered by operator.

Expanded Control Functions

- ✓ **Enzyme**: Programmable daily timed feed with start and end time, feed duration, and multiple feeds per day.
- ✓ **Polymer**: Programmable for daily timed feed or feed-down control based upon turbidity reading and set point.
- ✓ **Sensor wash**: programmable sensor wash with start and end time, feed duration, and multiple cycles per day.

Energy Conservation Control Functions

- ✓ **Alternate Setpoints**: Run the pool at less demanding levels during periods of low usage.
- ✓ **Energy Conservation Mode**: Program a “Sleep” mode which suspends mechanical and chemical functions during off-hours, “waking” periodically to keep water quality in check.

Main Recirculation Pump Control Functions

- ✓ **On/Off Control**: Based upon various sensors and settings such as Low surge tank level, strainer high vacuum, Energy Conservation mode, Emergency Off, and Fireman Switch settings.

Optional Sensors

Add the following sensors for additional functionality. All sensor readings are depicted on front panel display, recorded in data logs, and have high and low alarm settings, which can generate email and/or text message alarm notifications. Additional features are listed with each sensor:

Flow rate sensor

- ✓ **Uses:** Main System Circulation Flow rate or Makeup Flow Rate with water consumption
- ✓ **Features**: Display and log flow rate, maintaining a total flow volume; Low System Flow alarm can disable chemical feeds.
- ✓ **Advanced VFD Recirculation Pump Control** (*US Patent #8,404,117*)
  - o Variable Frequency Drive interface (via optional 4-20mA output) to control recirculation pump drive level to maintain flow rate, effluent pressure, or fixed setting.
  - o Automatically adjusts flow rate to user-settable level during filter backwash.
  - o Four Manually-triggered and Four Scheduled profiles (called “Turndowns”) are user programmable.
  - o To assure water quality does not suffer during Turndowns, water chemistry alarms can be programmed to abort current Turndown and return to normal flow rate
  - o If Turndown does not satisfy minimum flow rate of heater, controller will temporarily increase flow rate during heating cycles to heater minimum.

Free chlorine sensor

- ✓ Choose from two free chlorine sensor technologies:
  - o CP-1
  - o Membrane
- ✓ **Primary Sanitizer**: Based on free chlorine input, ORP input, or bracketed combination of the two
- ✓ **Sanitizer Booster**: Selectable trigger set point and separate ending set point.

Total (Combined) chlorine sensor (requires free chlorine sensor)

- ✓ Total and Combined chlorine readings, with high and low alarm settings
- ✓ Derives combined chlorine, with high alarm setting, from total chlorine and free chlorine readings
- ✓ Values recorded in internal data logs
- ✓ Combined chlorine level can be interfaced to air handling systems to reduce air turnover
- ✓ **UV (Combined Chlorine) Control**: Programmable combined chlorine set point; BECSys7 will activate a relay to turn down UV system when combined chlorine reading is below set point.

Optional conductivity sensor used to measure Total Dissolved Solids (TDS)

- ✓ **TDS**: Feed-down control of drain valve based upon TDS set point, with programmable fail-safe timer.

Auxiliary inputs/sensors (up to 8 from the following list):

- Filter Influent Pressure
  - Controller calculates **Filter Differential Pressure** (requires Filter Effluent Pressure sensor)
  - Can be used to trigger automatic backwash
- Filter Effluent Pressure
  - Controller calculates **Filter Differential Pressure** (requires Filter Influent Pressure sensor)
  - Can be used to trigger automatic backwash
- Pump Effluent Pressure
  - Controller calculates **TDH**: Monitor pump Total Dynamic Head (TDH) with user settable high/low alarm settings (requires Strainer Vacuum sensor).
  - Required for TDH monitoring when there is a pressure drop between the pump effluent and filter influent
- Strainer Vacuum
  - Controller calculates **TDH**: Monitor pump Total Dynamic Head (TDH) with user settable high/low alarm settings (requires pump effluent or filter influent pressure sensor).
  - Dirty Strainer Warning, based upon a programmable vacuum set point
  - High Vacuum Alarm, based upon a programmable vacuum set point. Can trigger Emergency Off condition, disabling the circulation pump.
- Makeup Water Flow Sensor
  - Monitor makeup water consumption, with totalizer resettable by operator.
- Side Stream Flow Sensor
  - Monitor flow rate through side stream, e.g. heater.
- Additional System Circulation Flow Sensor
  - Combine with System Flow Rate sensor to monitor combined flow in split stream systems
- Surge Tank Level (BECSys SLS sensor)
  - **Surge Tank monitoring**: monitor, display and data log surge tank level
  - **Autofill**: control water makeup valves to maintain pool water level setpoint based upon surge tank (or equivalent) level, with a programmable alternate set point.
- Backwash Tank Level (BECSys SLS sensor)
  - **Backwash Tank monitoring**: monitor, display and data log backwash tank level
- pH Liquid Chemical Inventory (BECSys LLS sensor)
  - **Liquid Chemical Inventory**: monitor, display and data log chemical inventories with low alarm settings
- Chlorine Liquid Chemical Inventory (BECSys LLS sensor)
  - **Liquid Chemical Inventory**: monitor, display and data log chemical inventories with low alarm settings
- Turbidity
  - Monitor turbidity, and feed polymer

Filter Backwash (BW) Control Functions (Optional)

- ✓ **Initiation**: Programmable based upon time, pressure differential, system flow, flow volume, turbidity, or Manual.
- ✓ **Standard Operation**: Features include a settable Inhibit period, BW Frequency Failsafe, Fireman Cycles, Primary/Priority Valve management, alternating lead filter, BW duration, and dwell time between filters.
- ✓ **BW Holding Tank Management**: Monitor the backwash holding tank to prevent overflow. Automatically suspend backwash when tank is full, and resume when empty, keeping track of the cumulative backwash time.
- ✓ **BW Lockout Management**: Multiple BECSys7s and/or BECSysBWs coordinate to prevent more than one system from backwashing at the same time.
- ✓ **Advanced Optimization**: Accessory relay can be programmed for wide range of options, such as dechlorination in the BW holding tank. Save water by ending a filter backwash early when desired turbidity level reached.

Specification/Ordering Guide

Part #	BECSys7 Specification/Ordering Guide	
BECSys7-	BECSys7 Total Equipment Room Controller with flow cell, BECSys pH, ORP and temperature sensors, Gbit Ethernet, BECSys for Windows, 5-year electronics/2-year sensor warranty	Selection #
↓	**Flow Switch Type**	**01**
E	Reed Flow Switch	
O	Rotary Flow Switch & check valve	
X	Flow Switch Integrated into Lighted Flow Cell (see Flow Cell selection)	
↓	**Sensor Wire Length**	**02**
S	Short (36 inch) Probe Wires	
L	Long (10 foot) Probe Wires	
↓	**Input Voltage Selection**	**03**
1	115 VAC input power	
2	230 VAC input power	
↓	**Communications**	**04**
G	Gbit Ethernet with EZConnect	
M	Gbit Ethernet with EZConnect and MODBUS TCP/IP	
T	100BaseT Ethernet (legacy)	
U	100BaseT Ethernet with MODBUS TCP/IP (legacy)	
B	56k Fax/Data Modem and 100BaseT Ethernet (legacy)	
V	56k Fax/Data Modem and 100BaseT Ethernet with MODBUS TCP/IP (legacy)	
↓	**ORP Sensor Tip Material**	**05**
P	Platinum Band	
S	Solid Gold Band	
↓	**Chlorine Sensor Circuitry**	**06**
1	CP-1 Chlorine Sensor circuitry in controller	
M	Membrane Style Chlorine Sensor circuitry in controller	
↓	**Conductivity Sensor**	**07**
C	Conductivity Sensor	
X	No conductivity sensor	
↓	**Option Board #1**	**08**
O	Four 4-20mA outputs AND Four loop power supplies for 4-20mA inputs	
L	Four loop power supplies for 4-20mA inputs (No 4-20mA outputs)	
X	No 4-20mA outputs or loop power supplies	
↓	**Option Board #2**	**09**
O	Four 4-20mA outputs **AND** Four loop power supplies for 4-20mA inputs	
L	Four loop power supplies for 4-20mA inputs (No 4-20mA outputs)	
X	No 4-20mA outputs or loop power supplies	
↓	**Flow Cell**	**10**
R	Round	
L	Lighted Flow Cell (pH, ORP, temp sensors)	
P	Lighted Flow Cell (pH, ORP, temp and CP-1); includes CP-1 sensor	
↓	**Back Panel**	**11**
B	Preassembled on backpanel	
W	With Connection Center on back panel	
I	With Connection Center and Interlock Relays on back panel	
A	LFC preassembled, no backpanel	
X	Shipped as kit	
↓	**Filtration Control**	**40**
N	No Filtration Control (standard)	
F	With Filtration Control	

BECSys7-	O	L	1	G	P	M	X	O	X	R	W	F	Example Part Number

BECSys7 with rotary flow switch, long probe wires, 115VAC input, 1 Gbit Ethernet with EZConnect, platinum band ORP probe, input circuit for membrane chlorine sensor, four 4-20mA outputs with four loop power supplies, no 2nd option board, round flow cell preassembled on backpanel with Connection Center and filtration control.

Specification/Ordering Guide Selections

Flow Switch Type (Selection 01)

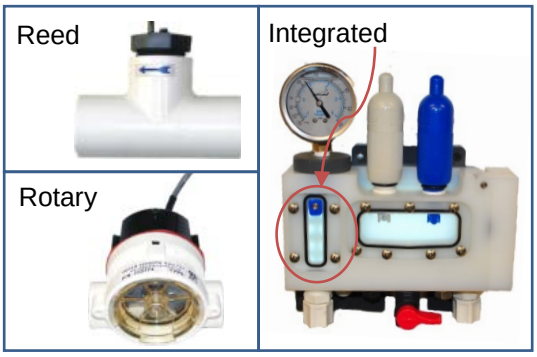

The flow switch is a vital safety component, which assures that water is flowing through the sample stream. When there is no water flowing through the sample stream, the sensor readings are not reliable.

There are three options for flow switch

- Reed flow switch
- Rotary flow Switch & Check Valve
- Integrated into Lighted Flow Cell; this option requires that the Lighted Flow Cell be selected in the Flow Cell section (Selection 10).

Sensor Wire Length (Selection 02)

pH, ORP and temperature sensors can have two sensor length: 36" and 10'. The only reason to need 10' cable length is in situations where the flow cell will be mounted more than 36" away from the controller. When ordering a controller pre-mounted on a back panel (Selection 11), the short (36") sensor wire length should be selected/specified.

Input Voltage Selection (Selection 03)

The BECSys7 can be specified to accept 115 VAC input power or 230 VAC input power. In either case, the BECSys7 can accept either 50 or 60 Hz.

Communications (Selection 04)

All BECSys7 controllers come equipped with Ethernet communications. BECSys for Windows PC software and the BECSys Now mobile app for Android and iOS are included.

The Gbit Ethernet selection is standard, and includes EZConnect support. Furthermore, new feature development (firmware v2.00 and higher) will require Gbit Ethernet. BECS strongly recommends Gbit Ethernet for all new BECSys7 controllers.

GBit Ethernet with EZConnect: Standard, maximum speed Ethernet; backwards compatible with 100BaseT and 10BaseT local area networks. Includes EZConnect support. Supports latest firmware releases.

GBit Ethernet with EZConnect with MODBUS TCP/IP: Adds support for a MODBUS TCP/IP connection over the Gbit Ethernet connection. The MODBUS TCP/IP capability is required when interfacing to a Building Management System with the BMS protocol converter. EZConnect, BECSys for Windows and the BECSys Now mobile app are also supported.

Legacy support for 100BaseT Ethernet is maintained and continues to be available through the end of 2017; however, not all features described in this document are available with 100BaseT Ethernet (systems with 100BaseT Ethernet can be upgraded to Gbit Ethernet in the field). Firmware v1.xx (v1.62 at time of this data sheet publication) is the last firmware release available for systems with 100BaseT Ethernet. BECS discourages the specification of 100BaseT Ethernet for new BECSys7 controllers.

100BaseT Ethernet: Legacy Ethernet connection, supporting v1.xx series firmware versions; No support for v2.xx series firmware.

100BaseT Ethernet with MODBUS TCP/IP: Adds support for a MODBUS TCP/IP connection over the legacy 100BaseT Ethernet connection. The MODBUS TCP/IP capability is required when interfacing to a Building Management System with the BMS protocol converter. BECSys for Windows and the BECSys Now mobile app are also supported.

56k Fax/Data Modem and 100BaseT Ethernet: Dial up (phone) modem and the legacy 100BaseT Ethernet connection, supporting v1.xx series firmware versions; No support for v2.xx series firmware.

56k Fax/Data Modem and 100BaseT Ethernet with MODBUS TCP/IP: Dial up (phone) modem and the legacy 100BaseT Ethernet connection, with support for a MODBUS TCP/IP. The MODBUS TCP/IP capability is required when interfacing to a Building Management System with the BMS protocol converter. BECSys for Windows and the BECSys Now mobile app are also supported.

ORP Sensor Tip Material (Selection 05)

All BECSys7 controllers come with an ORP sensor included. The standard ORP sensor is constructed with a platinum band electrode ("tip").

A gold tip version of the ORP sensor is also available, and may be beneficial in systems with salt chlorine generators.

Chlorine Sensor Circuitry (Selection 06)

BECSys7 controllers are capable of monitoring free chlorine levels with an optional sensor. Two sensors are available:

- CP-1
- Membrane

Different circuitry is required in the BECSys7 controller for these two sensors. Even if the system will not initially include a free chlorine sensor, a selection must be made as to which *circuitry* is included in the controller.

Conductivity Sensor (Selection 07)

BECSys7 controllers are capable of monitoring conductivity (TDS). If selected, the conductivity sensor will be included in the BECSys7 configuration, along with a mounting "T" kit.

Option Board #1 (Selection 08)

There are 2 options boards from which to choose:

1. Four (4) 4-20mA output signals AND Four (4) loop power supplies for 4-20mA inputs.
2. No 4-20mA output signals; Four (4) loop power supplies for 4-20mA inputs.

4-20mA Output Signals Uses

- 4-20mA output signals are required for VFD control and Main Drain modulating valve control; one signal per VFD and one signal per main drain valve.
- 4-20mA output signals may also be used to report input readings to a Building Management Systems (BMS) or independent data logger. Typically MODBUS TCP/IP (See Communications section) is used for BMS interface, and independent data loggers are rarely used due to the comprehensive on board data logging available on the BECSys7.
- The 1st option board mentioned above provides 4 of these signals.

Loop Power Supplies for 4-20mA Inputs

- Many optional sensors require a power supply, including pressure and vacuum transducers, BECSys LLS and BECSys SLS liquid level sensors and the BECSys PLX point level switch.
- Each such sensor will require a loop power supply, which can be provided by the BECSys controller.
- Both of the options boards mentioned above provides 4 of these loop power supplies.

Option Board #2 (Selection 09)

An second option board, providing an additional four (4) 4-20mA output signals and/or four (4) loop power supplies for 4-20mA inputs, can be added to the BECSys7.

Flow Cell (Selection 10)

Three flow cell options are available for the BECSys7

- Round PVC
- Lighted Flow Cell (pH, ORP, temperature sensors)
- Lighted Flow Cell (pH, ORP, temperature and CP-1 sensors)

When specifying the Lighted Flow Cell (LFC), the Flow Switch Type (Selection 01) should be specified as "X" (Flow Switch Integrated into Lighted Flow Cell).

In all cases sample stream components such as pressure gauge, isolation ball valves, sample tap and associated PVC fittings are included.

Round	LFC (no CP-1)	LFC (with CP-1)
		

Back Panel (Selection 11)

Shipped as kit: Flow cell will be delivered unassembled; installer will assemble flow cell per instructions provided in Installation Manual. No back panel will be included; controller and flow cell will be mounted directly to wall.

LFC preassembled, no back panel: The Lighted Flow Cell can be ordered preassembled, even when the system is not being ordered on a back panel.

Preassembled on back panel: The BECSys7 flow cell is pre-assembled at the factory and mounted with the controller on a back panel for convenient installation. In this configuration a lightweight PVC mounting frame is easily leveled and installed on the wall. The back panel assembly is then hung on the mounting frame through 4 teardrop holes. Tighten the four bolts, make plumbing and electrical connections and installation is complete.

With Connection Center on back panel (with and without Interlock Relays): The Connection Center option provides the most convenient installation. In addition to pre-assembly of the flow cell at the factory, the BECSys7 will be pre-programmed to the specific configuration of an installation. The Connection Center also provides a separate wiring box for all line-voltage field wiring. Configuration-specific wiring diagrams are created for the installation based upon a Configuration Specification submitted at time of specification or time of order. Interlock Relays can be included in the Connection Center to centralize important circulation pump interlocks with chemical feeds, UV, heaters and other pieces of equipment within the mechanical room.

Preassembled on back panel

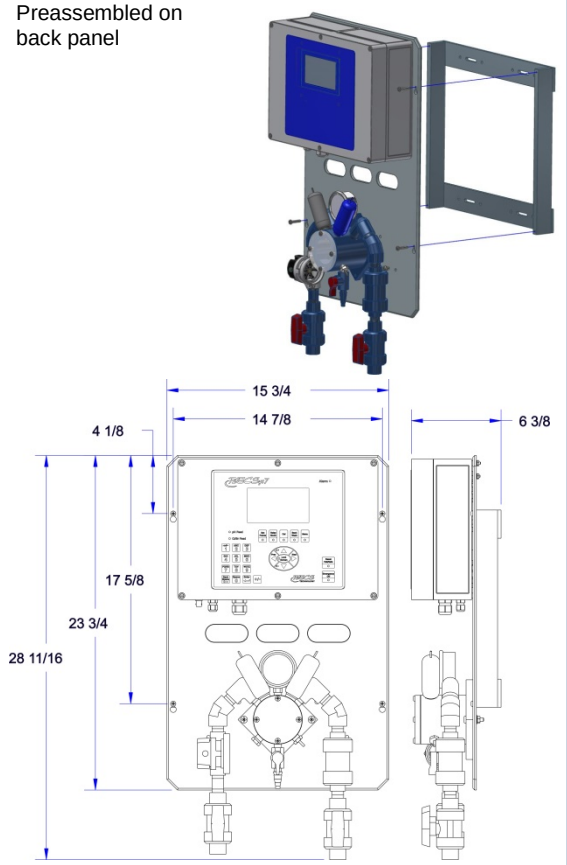

With Connection Center

Dimensions of panel are the same whether or not Interlock Relays are included.

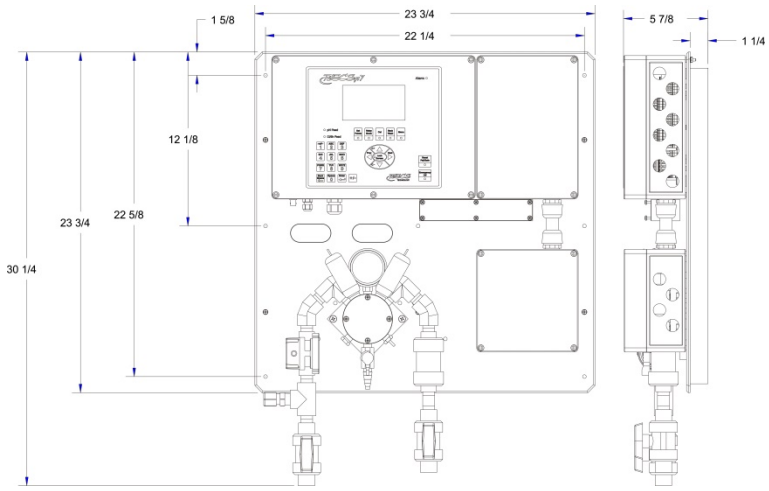

Filtration Control (Selection 40)

The BECSys7 can optionally provide automatic or semi-automatic filter backwash control. With automatic control, the BECSys7 can be programmed to automatically initiate backwash based upon pressure differential, system flow, flow volume, turbidity or time. With semi-automatic control, the backwash is initiated manually by the operator. In either case, the backwash sequence of operations is controlled by the BECSys7.

Specifications	
BECSys7 Part Number	BECSys7, See Specification/Ordering Guide for options
Firmware version	v2.00 and higher
Physical	
Enclosure Material	Glass Reinforced Polycarbonate, NEMA 4X (IP66)
Overlay Material	UV Stabilized Polyester
Flow Cell Material (round)	PVC Body, Clear Acrylic Window, Stainless Steel Hardware
Flow Cell Material (lighted)	UHMW Body, Clear Acrylic Window, Stainless Steel Hardware
Back Panel Material	PVC
Display	14 Row, 40 Character, Backlit Alpha/Numeric LCD
pH and ORP Sensor Connection Type	BNC
Backpanel Dimensions	Width: 15.75” Height: 28.6875” Depth: 6.375”
Backpanel with Connection Center Dimensions	Width: 23.75” Height: 30.25” Depth: 5.875”
BECSys7 Enclosure Dimensions	Width: 14.21” Height: 10.00” Depth: 4.37”
Environmental	
Storage Temperature	-30 to 70 °C
Ambient Operating Temperature	-18 to 50 °C
Ambient Humidity	95% non-condensing maximum
Electrical	
Voltage	115/230 VAC, 50/60 Hz
Phase	Single
Current 115 VAC Input 230 VAC Input	32.5 Amps Full Load: (0.5 A: Controller, 32 A: Relay Outputs, 8A x 1, 3A x 8) 32.25 Amps Full Load (0.25 A: Controller, 32 A: Relay Outputs, 8A x 1, 3A x 8)
Performance	
pH Range / Resolution	0 to 14 pH / User Selectable: 0.1 pH units or 0.01 pH units
ORP Range / Resolution	-1000 to +1000 mV / 1mV
Temperature Range / Resolution	32 to 212 °F (0 to 100 °C) / 1 °F or °C
Membrane Free Chlorine (optional) Range/Res	0 to 20 ppm / 0.1 ppm
CP-1 Free Chlorine (optional) Range/Res	0 to 10 ppm / 0.1 ppm
Total Chlorine (optional) Range/Res	0 to 20 ppm / 0.1 ppm
Combined Chlorine (optional) Range/Res	0 to 20 ppm / 0.1 ppm
Conductivity/TDS (optional) Range/Resolution	0 to 20,000 micro-mhos (cond) / 1 micro-mho 0 to 10,000 ppm (TDS) / 1 ppm
Flow Rate (optional) Range/Resolution	0 to 8800 gpm (0 to 33265 liter/min) / 0.1 gpm or lpm
Flow Volume	Records up to 999 trillion gallons or liters
Turbidity (optional) Range/Resolution	0 to 20 NTU / 0.01 NTU
Pressure (optional) Range	0 to 100 psi (0 to 689 kPa)
Vacuum (optional) Range	-15 to +85 psi (-103) to 586 kPa) -31 to 173 in. Hg (-78 to 440 cm Hg)
4-20 mA Inputs (8 standard)	Resolved with 16 bit Analog to Digital Converter
4-20 mA Outputs (optional)	13 bit Digital to Analog Conversion, Load Capacity 440 Ω per output channel
Failsafe Overfeed Timers	Programmable in 1 minute increments, up to 18 hours
RS-485	9600 bps at distances up to 4000 ft.
Ethernet (standard)	1 Gigabit (100BaseT and 10BaseT compatible) over standard CAT 5 cable
Modem Type (legacy, optional)	56k bps V.92 fax/data
Solid State Relay Outputs (4), each jumper selectable to:	1) “Line” Setting: Same as Controller Input Voltage: 115 VAC or 230 VAC, 3 Amps max 2) “Common” Setting: Supports 24 to 280 VAC; Each Solid State Relay has its own Common position provided to bring in Solid State Relay output voltage
Mechanical Relay Outputs (5), each jumper selectable to:	1) “Line” Setting: Same as Controller Input Voltage: 115 VAC or 230 VAC; Relay Five, 8 Amps max, Relays Six thru Nine, 3 Amps max 2) “Common” Setting: Supports maximum 30 VDC or 250 VAC; Each Mechanical Relay has its own Common position provided to bring in Mechanical Relay output voltage.

Related Documents

Included in standard configuration	Part Number(s)	Data Sheet
BECSys pH Sensor	9660010, 9660013	ENG-4321-DOC
BECSys ORP Sensor	9660022, 9660023 9660038, 9660040	ENG-4317-DOC
RTD Temperature Sensor	9660003, 9660016	ENG-4327-DOC
Round PVC flow cell	1210147	ENG-4315-DOC
Reed flow switch	9660006	ENG-4328-DOC
BECSys7 Operation & Maintenance Manual	8620108	n/a
BECSys7 Installation & Technical Manual	8620111	n/a
BECSys7 Laminated Quick Reference Card	8620038	n/a
BECSys for Windows PC Communications Software	1230089	ENG-4377-DOC
Options	**Part Number**	**Data Sheet**
Rotary flow switch	9660007	ENG-4329-DOC
Lighted Flow Cell	1210515, 1210516	ENG-6073-DOC
Flow Rate Sensor	9660008, 9660009 9660004	ENG-4320-DOC
CP-1 Free Chlorine Sensor	2210422	ENG-6066-DOC
Membrane Free Chlorine Sensor	9660005	ENG-4349-DOC
Total Chlorine Sensor (for Combined Chlorine monitoring)	8660044	ENG-4659-DOC
Conductivity/TDS Sensor	9660022	ENG-4313-DOC
Turbidity Sensor	1210261	ENG-4350-DOC
Pressure Transducer	8660066, 8660067	ENG-4314-DOC
Compound Vacuum/Pressure Transducer	8660068, 8660069	ENG-4319-DOC
BECSys SLS Sensor – Surge Tank Level Sensor	BECSysSLS	ENG-6074-DOC
BECSys LLS Sensor – Liquid Level Sensor	BECSysLLS	ENG-6067-DOC
BECSys Wi-Fi Module	2100287	ENG-5373-DOC
BECSys SRX Solid-state relay expansion module (adds 5 solid-state relays)	1100185, 1100219	ENG-4351-DOC
BECSys MRX Mechanical relay expansion module (adds 5 mechanical relays)	1100183, 1100218	ENG-4363-DOC
Reference Information	**Format(s)**	**Document #**
BECSys VFD Application Note	.pdf	ENG-4424-DOC
Main Drain Modulating Valve Application Note	.pdf	ENG-6078-DOC
Ethernet Application Note	.pdf	ENG-4604-DOC
EZConnect Application Note	.pdf	ENG-6072-DOC
Advanced Alarm Notification Application Note	.pdf	ENG-4588-DOC
Building Management System (BMS) Application Note	.pdf	ENG-5508-DOC
MODBUS TCP/IP Developer's Guide	.pdf	ENG-5657-DOC
BMS Protocol Converter Data Sheet	.pdf	ENG-6033-DOC
BECSys7 Connection Center Specification Form	.doc	EFM-005
BECSys7 Bid Specification	.doc, .pdf	ENG-4268-DOC
BECSys7 Wiring Diagrams	.dxf, .pdf	ENG-4259-IDW
BECSys7 Line Drawing	.dxf, .jpg	ENG-4434-CDR
BECSys7 Sales Brochure	.pdf	SLS-4335-DOC
BECSys Family Sales Brochure	.pdf	SLS-4336-DOC